Since 1958

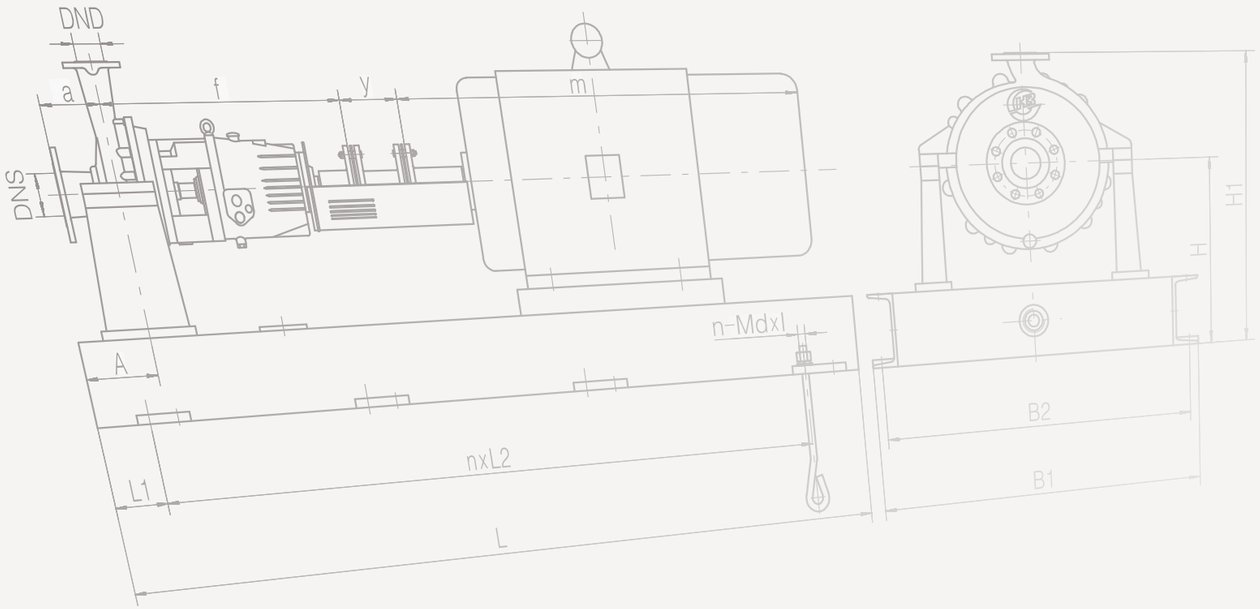

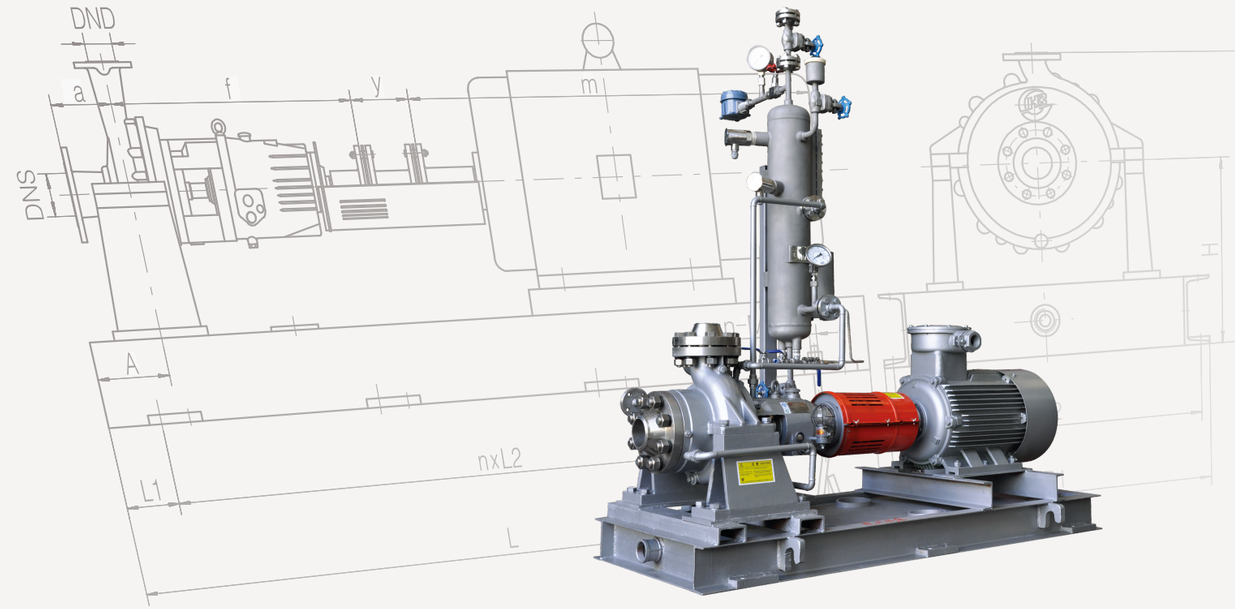

杭州碱泵有限公司
HANGZHOU ALKALI PUMP CO.,LTD.
浙江华泵科技有限公司
HB PUMP CO., LTD.

销售部电话: 0571-89905601/89905603
销售部传真: 0571-89905602
E-mail: sales@hbgroups.com
http://www.hbgroups.com
地址: 杭州市三墩镇西湖科技园西园五路12号
邮编: 310030

International Clients
Tel: +86 571 89900102
Fax: +86 571 89905602
E-mail: overseas@hbgroups.com
http://www.hbgroups.com
Add: No.12 Xiyuan 5 Road, Westlake Science & Technology Zone, Sandun Town, Hangzhou
Post code: 310030

版本号：2020.11

HPA/HPB 系列石油化工流程泵

HPA/HPB Series Petrochemical Process Pump

- 符合API610、API682、ISO13709、ISO21049标准
  Conform to API610 / API682 standard
- 输送介质温度-80°C~450°C
  Operation temperature -80°C~450°C
- 挠性联轴器传动
  Flexible coupling
- 最大工作压力10.0MPa
  Max working pressure 10.0MPa

全球2年质保
2-years-warranty Worldwide

石油化工流程泵

Petrochemical Process Pump

主要应用于
Application

- ☑ 石化
- ☑ 烯烃
- ☑ 化工
- ☑ 煤化
- ☑ 炼油

- ☑ Petrochemical
- ☑ Olefin
- ☑ Industry
- ☑ Coal chemical
- ☑ Oil refining

用法
Usage

HPA/HPB石油化工流程泵被设计用于输送清洁或含有少量颗粒，低温或高温、中性或有腐蚀的液体介质工况。符合API610标准。

HPA/HPB petrochemical process pump is designed for conveying clean liquid media, or liquid media containing few particles, or low temperature / high temperature liquid media, or neutral / corrosive liquid media. It meets with API610 standard.

法兰标准 Flange standard	EN 1092-1	ASME/ANSI B16.5
公称压力 Nominal pressure	PN40/PN100	Class300/Class600

材料
Material

与介质接触的过流部件，材料符合ASTM标准，常用材料如下：

- ☑ 12%铬钢
- ☑ 不锈钢
- ☑ 双相不锈钢
- ☑ 铸钛
- ☑ 哈氏合金

Wetted parts comply to ASTM standard, common material as follows:

- ☑ 12% chrome steel
- ☑ Stainless steel
- ☑ Duplex stainless steel
- ☑ Cast titanium
- ☑ Hastelloy

泵型号说明
Pump model instruction

HPA 80-50-200

- 叶轮名义直径 Nominal diameter of impeller(mm)
- 泵出口直径 Discharge diameter of pump(mm)
- 泵进口直径 Suction diameter of pump(mm)
- 系列号 Series number

泵运行数据
Operating data

流量（3～2250）m³/h
扬程（3～230）m
温度（-80～450）°C

Flow rate (3~2250)m³/h
Total heads (3~230)m
Operating temperature (-80~450)°C

现场标准条件
Standard conditions at site

- ☑ 连续运行过程中的相对湿度不大于90%
- ☑ 环境温度不高于40°C，不低于4°C
- ☑ 海拔高度不超过1000m

当场地条件与上述规定不符时必须加以说明。

- ☑ Relative humidity during continuous operation max. 90%
- ☑ Ambient temperature max.40°C, min.4°C
- ☑ Permissible altitude up to 1000m above sea level

Deviations from the site conditions specified herein must already be disclosed in the inquiry.

流量
Flow rate

离心泵的允许运行范围取决于：

- ☑ 叶轮形状
- ☑ 转速
- ☑ 振动
- ☑ 介质特性
- ☑ 轴承及轴载荷
- ☑ 泵壳的散热及材料的抗腐蚀性
- ☑ 工况进口净压头与泵汽蚀余量

适用工作范围在性能曲线和泵数据表中表示。

The permissible operating range of centrifugal pumps depends on：

- ☑ Impeller shape
- ☑ Speed
- ☑ Vibration
- ☑ Medium charateristics
- ☑ Bearing and shaft load
- ☑ Heat dissipation-particularly with regard to insulated volute casings and the corrosion resistance of materials
- ☑ The net positive suction head of the working condition and NPSH

The operating range applicable to the pump is indicated in the individual characteristic curves and the pump data sheet.

出口压力
Outlet pressure

离心泵出口压力取决于：

- ☑ 泵入口压力
- ☑ 选定叶轮直径的最大总扬程
- ☑ 泵送介质的密度

The pump outlet pressure at the outlet nozzle depends on:

- ☑ The pump inlet pressure
- ☑ The maximum total head of the selected impeller diameter
- ☑ The density of the medium to be pumped

最大泵出口压力P2max op计算公式如下：

$P2max\ op = P1max\ ip + \rho * g * H * 10^{-5}$

P2max op为最大出口压力
P1max ip为最大进口压力
ρ为泵送介质密度
g为引力常数
H为零流量下的最大总扬程或在选定叶轮直径下性能曲线峰值

泵选择和运行必须确保泵出口最大压力绝不能超过工作温度下泵体最大允许工作压力。
这也适用于排放阀关闭时的调试。

The maximum pump outlet pressure P2max op is calculated using the formula:

$P2max\ op = P1max\ ip + \rho * g * H * 10^{-5}$

P2max op = maximum pump outlet pressure(bar)
P1max ip = maximum pump inlet pressure(bar)
ρ = density of the medium to be pumped(kg/m³)
g = gravitation constant(m/s²)
H = maximum total head at zero flow or at the peak of the pump's characteristic curve at the selected impeller diameter(m)

Pumps must be selected and operated in a way which ensures that the maximum pump outlet pressure does by no means exceed the maximum permissible operating pressure of the casing pall wc at operating temperature.
This also applies to commissioning while the diacharge vavle is closed(refer to fig 1).

压力和温度限制
Pressure and temperature limitations

泵体和泵盖最大工作压力取决于工作温度：

The maximum casing operating pressure pall wc of the casing and the casing cover depends on the operating temperature:

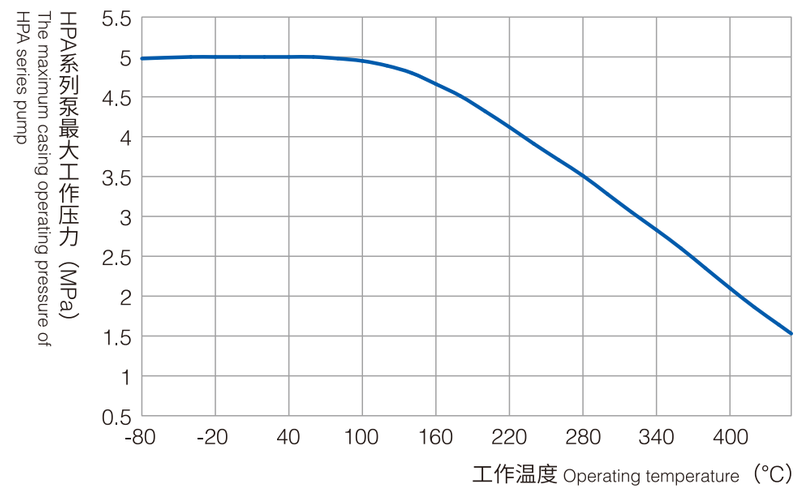

图1：HPA系列泵最大允许工作压力

Fig.1: Maximum permissible casing operating pressure pall wc. of HPA series pump

压力和温度限制
Pressure and temperature limitations

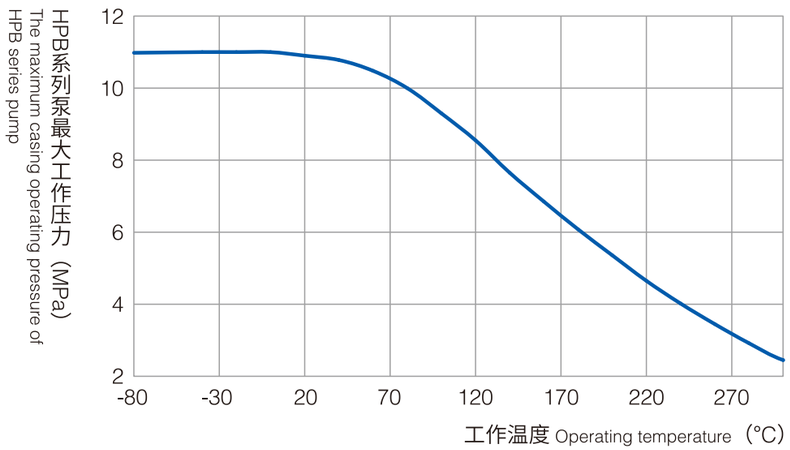

图2：HPB系列泵最大允许工作压力

Fig.2: Maximum permissible casing operating pressure pall wc. of HPB series pump

转速和叶轮直径限制
Speed and impeller diameter limitations

泵轴运行速度不能超过叶轮最大允许周转速度，这相当于65m/s。

The operating speed of the pump shaft must not exceed the maximum permissible peripheral speed of the impeller, which corresponds to 65m/s.

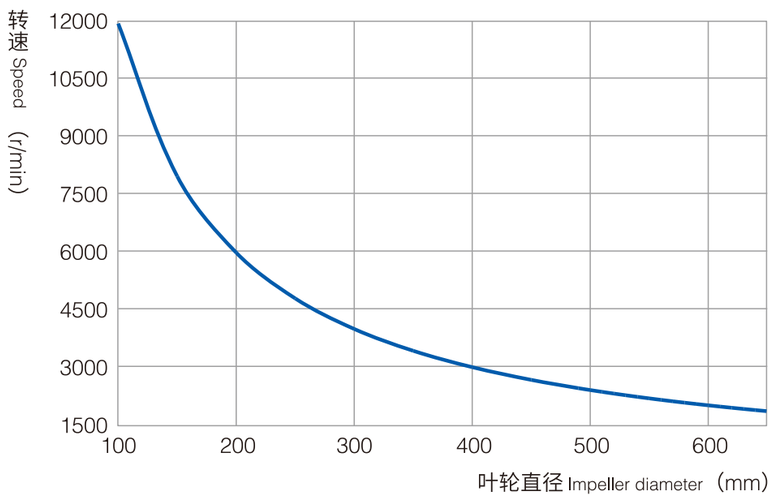

图3：最大允许泵轴运行速度

Fig.3: maximum permissible shaft speed

泵的结构 *STRUCTURE*

HPA/HPB石油化工流程泵是一种单级单吸悬臂式离心泵，泵体为轴向吸入径向排出，以中心线支承于底座上。泵盖通过止口定位于悬架体和泵体中间，通用性强。其技术要求符合API610标准。

HPA/HPB petrochemical process pump is a kind of single-stage single-suction cantilever centrifugal pump, the pump casing is of axial suction and radial discharge, along its central line it is supported on the base. And the pump cover is located between the suspension body and pump casing via seam allowance, it's applicable for most of objects. And it meets with API 610 standard.

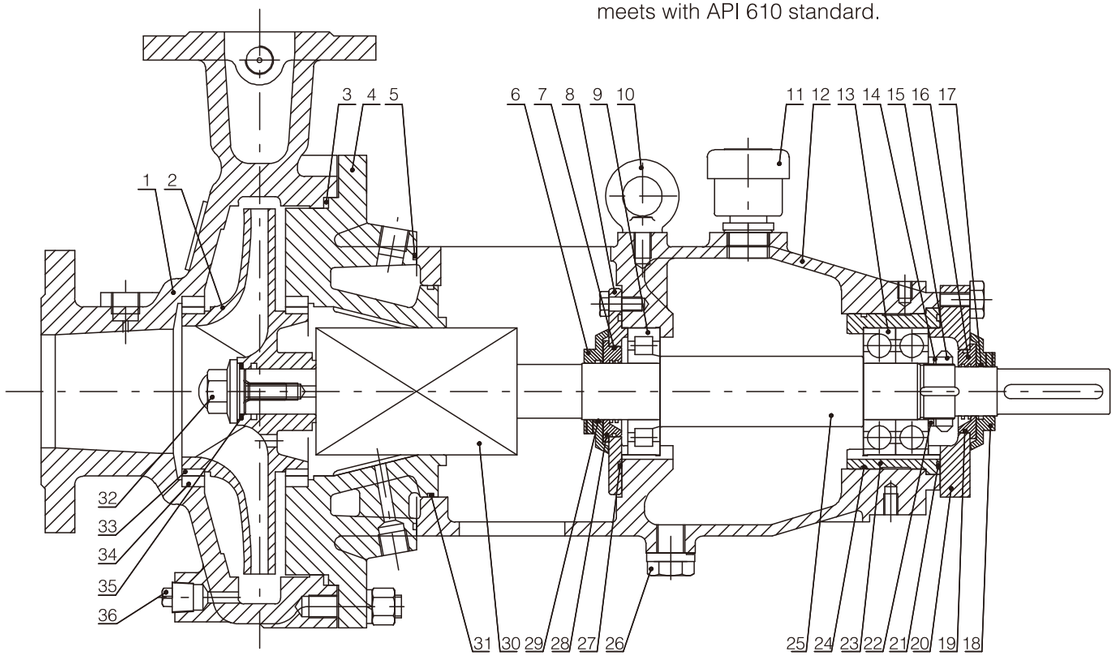

HPA总装剖面图

1	泵体 / Pump casing	13	后轴承 / Rear bearing	25	轴 / Shaft
2	叶轮 / Impeller	14	止动垫圈 / Tab washer	26	管堵 / Pipe plug
3	缠绕式垫片 / Spiral wound gasket	15	小圆螺母 / Small round nut	27	O型圈 / O-ring
4	泵盖 / Pump cover	16	轴承后盖内圈 / Inner ring of bearing rear cover	28	轴承前盖内圈 / Inner ring of bearing rear cover
5	O型圈 / O-ring	17	O型圈 / O-ring	29	O型圈 / O-ring
6	前防尘盘 / Front deflector	18	后防尘盘 / Back deflector	30	机械密封 / Mechanical seal
7	O型圈 / O-ring	19	O型圈 / O-ring	31	O型圈 / O-ring
8	轴承前盖 / Front cover of bearing	20	轴承后盖 / Back cover of bearing	32	叶轮螺母 / Impeller nut
9	前轴承 / Front bearing	21	O型圈 / O-ring	33	叶轮密封环 / Impeller ring
10	吊环螺钉 / Lifting bolt	22	O型圈 / O-ring	34	泵体密封环 / Casing ring
11	气孔盖 / Air vent cover	23	轴承压套 / Bearing gland sleeve	35	齿形垫片 / Dentiform gasket
12	悬架体 / Frame	24	后轴承套 / Rear bearing sleeve	36	管堵 / Pipe plug

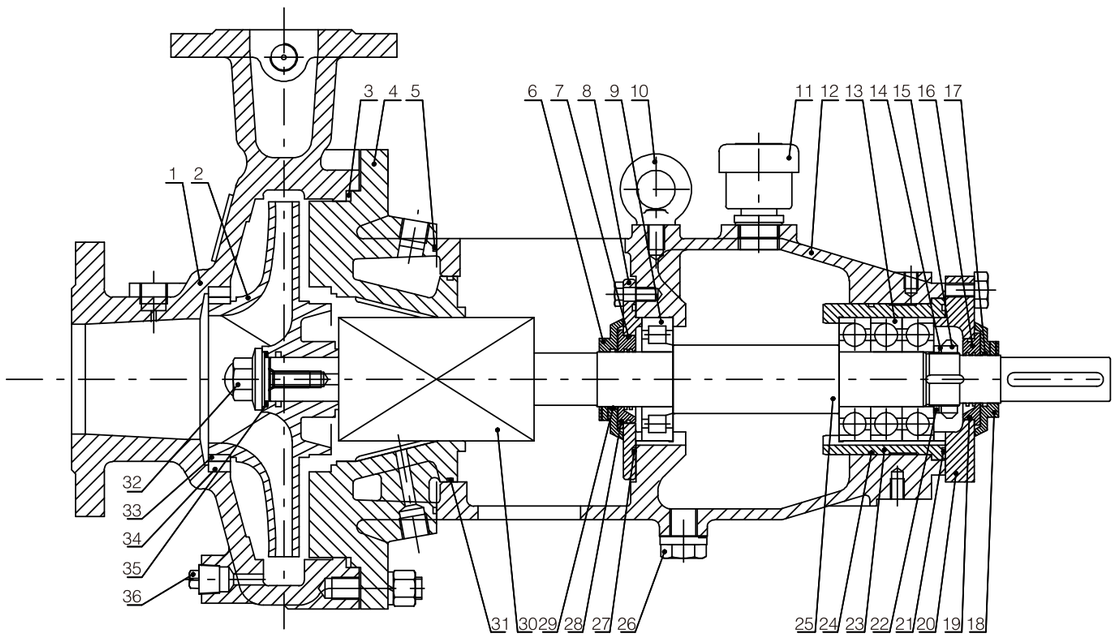

■ HPB总装剖面图

1	泵体 / Pump casing	13	后轴承 / Rear bearing	25	轴 / Shaft
2	叶轮 / Impeller	14	止动垫圈 / Tab washer	26	管堵 / Pipe plug
3	缠绕式垫片 / Spiral wound gasket	15	小圆螺母 / Small round nut	27	O型圈 / O-ring
4	泵盖 / Pump cover	16	轴承后盖内圈 / Inner ring of bearing rear cover	28	轴承前盖内圈 / Inner ring of bearing rear cover
5	O型圈 / O-ring	17	O型圈 / O-ring	29	O型圈 / O-ring
6	前防尘盘 / Front deflector	18	后防尘盘 / Back deflector	30	机械密封 / Mechanical seal
7	O型圈 / O-ring	19	O型圈 / O-ring	31	O型圈 / O-ring
8	轴承前盖 / Front cover of bearing	20	轴承后盖 / Back cover of bearing	32	叶轮螺母 / Impeller nut
9	前轴承 / Front bearing	21	O型圈 / O-ring	33	叶轮密封环 / Impeller ring
10	吊环螺钉 / Lifting bolt	22	O型圈 / O-ring	34	泵体密封环 / Casing ring
11	气孔盖 / Air vent cover	23	轴承压套 / Bearing gland sleeve	35	齿形垫片 / Dentiform gasket
12	悬架体 / Frame	24	后轴承套 / Rear bearing sleeve	36	管堵 / Pipe plug

泵的轴封采用集装式机密封，械并依据API682采用标准的腔体尺寸和推荐的冲洗方案。

The shaft seal of pump adopts assembling mechanical seal, and conforms to API682 in Cavity Size & flush scheme.

单端平衡型集装式
Single end balanced cartridge type

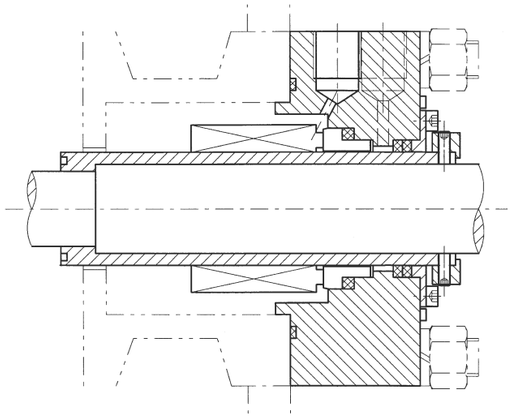

■ 单端平衡型机械密封 Single end balanced mechanical seal

双端平衡型集装式
Double end balanced cartridge type

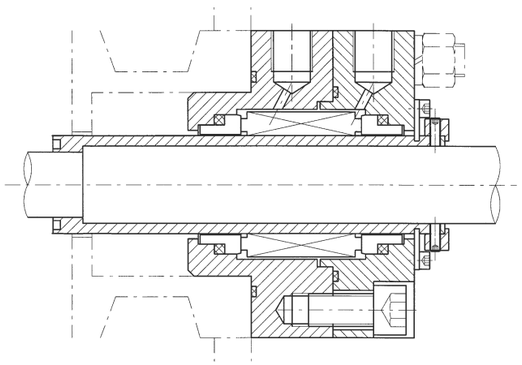

■ 双端面平衡型机械密封 Double end balanced mechanical seal

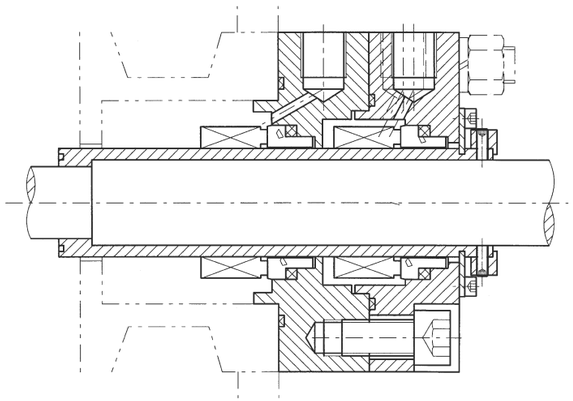

■ 串联式机械密封 Tandem mechanical seal

结构优化设计，操作安全性高
维修方便，使用寿命长

Optimized design, safe operation
Easy maintenance, long running life

后开门形式，检修时无需拆卸进出口管道，灵活方便，安装简易。

产品零件高度互换，降低用户备件库存。

Rear door, no need to disassemble the suction and discharge pipeline during maintenance, convenient and easy installation.

Highly interchangeable in produce parts, to reduce spare parts for customers.

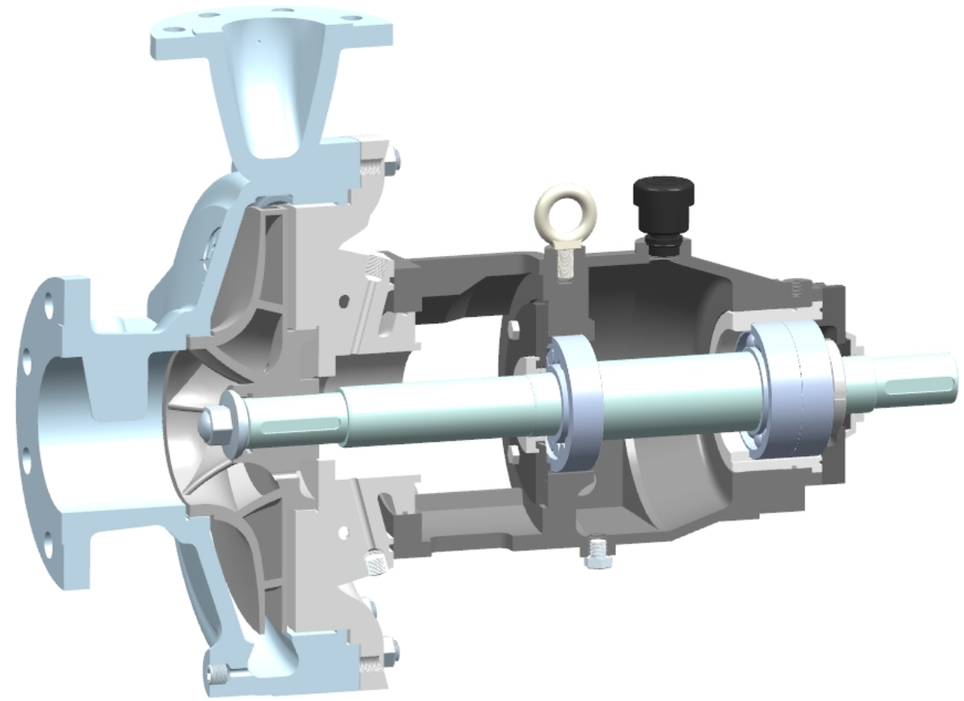

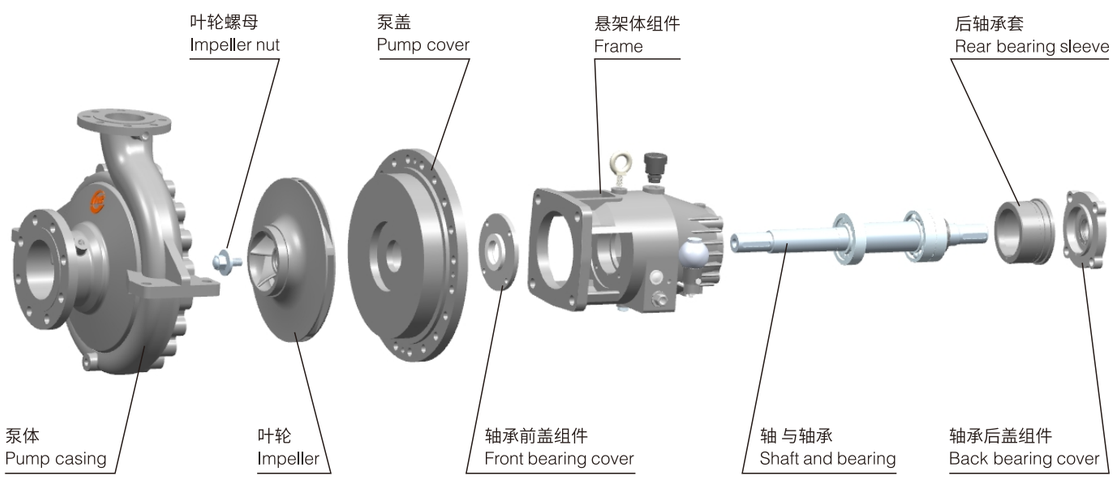

加粗重型轴，加长轴承间距，保证轴即使泵工作在远离设计点情况下产生挠度极小，运行稳定性好，降低维修费用及运行成本。

轴承采用油浴润滑，大空间轴承箱及油池，提高泵整体刚性，外加恒位油杯，自动补油，降低润滑油温升，延长轴承寿命。

复合迷宫轴承隔离器，彻底解决轴承箱漏油问题，防止进入灰尘及水，提高轴承使用寿命，运行更可靠。

Thickened heavy shaft and enlarged bearing spacing can ensure the minimum deflection, stable operation, less repairing fee and operation cost in case that the pump works far away from the design point.

The bearing adopts oil bath lubrication, large space bearing case and oil pool so as to enhance rigidity of the whole pump, equipping oil cup with constant oil level for automatic oil addition, so as to reduce the temperature rise of lubrication oil and prolong the lifetime of bearing.

Compounded labyrinth bearing isolator can completely solve the leakage problem of bearing case, so as to prevent from entering dust or water, prolong the lifetime of bearing, have more reliable operation.

结构优化设计，操作安全性高
维修方便，使用寿命长

Optimized design, safe operation
Easy maintenance, long running life

直锥形吸入室，速度场均匀，水力损失小，吸水室加导向板，减小液流周向旋量，降低水头损失，提高效率。

大泵双涡壳设计，减小径向力，提高泵运行稳定性，实现更长使用寿命。

泵采用B型角接触球轴承，以承受因工作点偏离设计点或用户苛刻工况（如高的进口压力等）所产生的轴向力，保证轴承使用寿命。

Conical suction chamber owns the virtues of uniform velocity field, less hydraulic loss, which equips a deflector, so as to reduce circumferential spinor of liquid flow, head loss and enhance efficiency.

Double-casing volute pump can reduce radical force, enhance the operation stability, realize maximum lifetime.

The pump adopts B-shaped angular contact ball bearing to bear the axial force due to deviation from the design point or harsh condition (like high inlet pressure etc), so as to prolong the lifetime of bearing.

合同试验
保证泵性能的满足

本公司依据合同和标准执行以下测试：

静水压试验
试验基于常温清水，压力为基本设计压力的1.5倍，保压10分钟。

性能试验
依据ISO9906标准测量，试验精度II类，验收类2B。

NPSH试验
依据ISO5199标准测量。

振动试验
依据ISO5199进行振动试验，泵的振动烈度级别控制在A级。

温度测量
在工作温度下，对轴承温升进行测量，测量的结果记录在案。

材料检验
零部件材质检验，铸件无损检测，保证整机可靠性。

Order-related tests,
confirm the performance of pump conform

The company carries out the tests below as standard:

Hydrostatic pressure test
Hydrostatic pressure test based on clean water at ambient temperature, test pressure is 1.5 times on design pressure.

Performance test
Measurement according to ISO9906, accuracy class II, acceptance class 2B.

NPSH test
According to ISO5199 standard.

Vibration test
According to ISO5199, vibration lightness level is controlled at class A.

Temperature test
Test the temperature rise of bearing, and keep records.

Raw material inspect
Spare and casting parts inspection, to ensure the reliability of the whole machinery.

订货须知
Notice to Order

（一）配用电机的额定输出功率与泵的额定轴功率之比应按照下列的百分数：

轴功率	百分比%
22kW以下	125%
(22~75)kW	115%
75kW以上	115%

The ratio of the motor's rated power to the pump's shaft power should be the following:

The shaft power of the pump	the ratio (%)
Below 22kW	125%
(22-75)kW	115%
Above 75kW	115%

（二）订货时按《泵工作条件》详细填写。

When ordering, please fill in the table “Working conditions of the pump”.

（三）保修条款只有在使用本公司原厂备件时才有法律效力。

Warranty is valid only when genuine spare parts of our company are used.

泵工作条件 Working Conditions of the Pump

工作条件 Operating conditions				输送介质 Pumped fluid			
流量 Capacity m³/h	最大 Max	额定 Rated	最小 Min	介质 1 Media _____	最大比例 Max ratio	最小比例 Min ratio	%
扬程 Total head m	最大 Max	额定 Rated	最小 Min	介质 2 Media _____	最大比例 Max ratio	最小比例 Min ratio	%
进口压力 Suction pressure MPa	最大 Max	额定 Rated	最小 Min	介质 3 Media _____	最大比例 Max ratio	最小比例 Min ratio	%
出口压力 Discharge pressure MPa	最大 Max	额定 Rated	最小 Min	固体 Solid _____	含量（湿基） Content (humidity)		Wt %
必需汽蚀余量 NPSH required m					粒度直径 Particle diameter		mm
操作条件 Operating conditions	连续 Continuous		间断 Intermittent	介质特性 Medium characteristics	腐蚀 Corrosion	磨(冲)蚀 Abrasion	
现场资料和公用事业条件 Spot conditions				泵送温度 Operation temp ℃	最大 Max	正常 Normal	最小 Min
位置 Position				密度 Density	在操作温度下 Under operating temp		kg/m³
室内 Indoor	有采暖 With heating		有遮棚 With shield	粘度 Viscosity	在操作温度下 Under operating temp		mPa.s
室外 Outdoor	无采暖 Without heating		无遮棚 Without shield	汽化压力 Vapor pressure	在操作温度下 Under operating temp		MPa(A)
必须的防寒气候条件 Requirement of Cold-proof				比热 Specific heat			kcal/kg℃
必须的耐湿热气候条件 Requirement of Damp-heat-proof				氯化物浓度 Concentration of chloride			PPM
现场资料 Site condition				H2S(硫化氢)浓度 Concentration of H2S			PPM
海拔高度 Altitude	m			危险程度 Hazardous liquid	易燃 Flammable	易爆 Explosive	有毒 Toxic
大气压力 Atmosphere pressure	kPa			挥发特性 Volatile characteristics	易 Easy	不易 Not easy	
相对湿度 Relative humidity	最大 Max	最小 Min	%	沸点 Boiling point			℃
环境温度范围 Ambient temp. Range	℃			结晶温度 Crystallization temp			℃
异常条件 Abnormal conditions	粉尘 Dust	烟雾 Smoking		熔点 Smelting point			℃
危险区域 Electrical classification	类 Class	级 Division	组 Group	闪点 Point of flammability			℃
电源 Power source	伏特 Volt	赫兹 Hz	相 Phase	相溶的液体 Compatible liquid			
冷却水 Cooling water	温度 Temp ℃	压力 Pressure	MPa	相溶的橡胶 Compatible rubber			
	氯化物浓度 Chloride concentration		PPM	临界温度 Critical temp			℃
仪表压缩空气 Compressed air of instrument	最大/最小压力 Max / Min. Pressure		/MPa	临界压力 Critical pressure			MPa
传动方式 Driving way				其它 Other			
联轴器 Coupling type							

性能范围 *Performance Range*

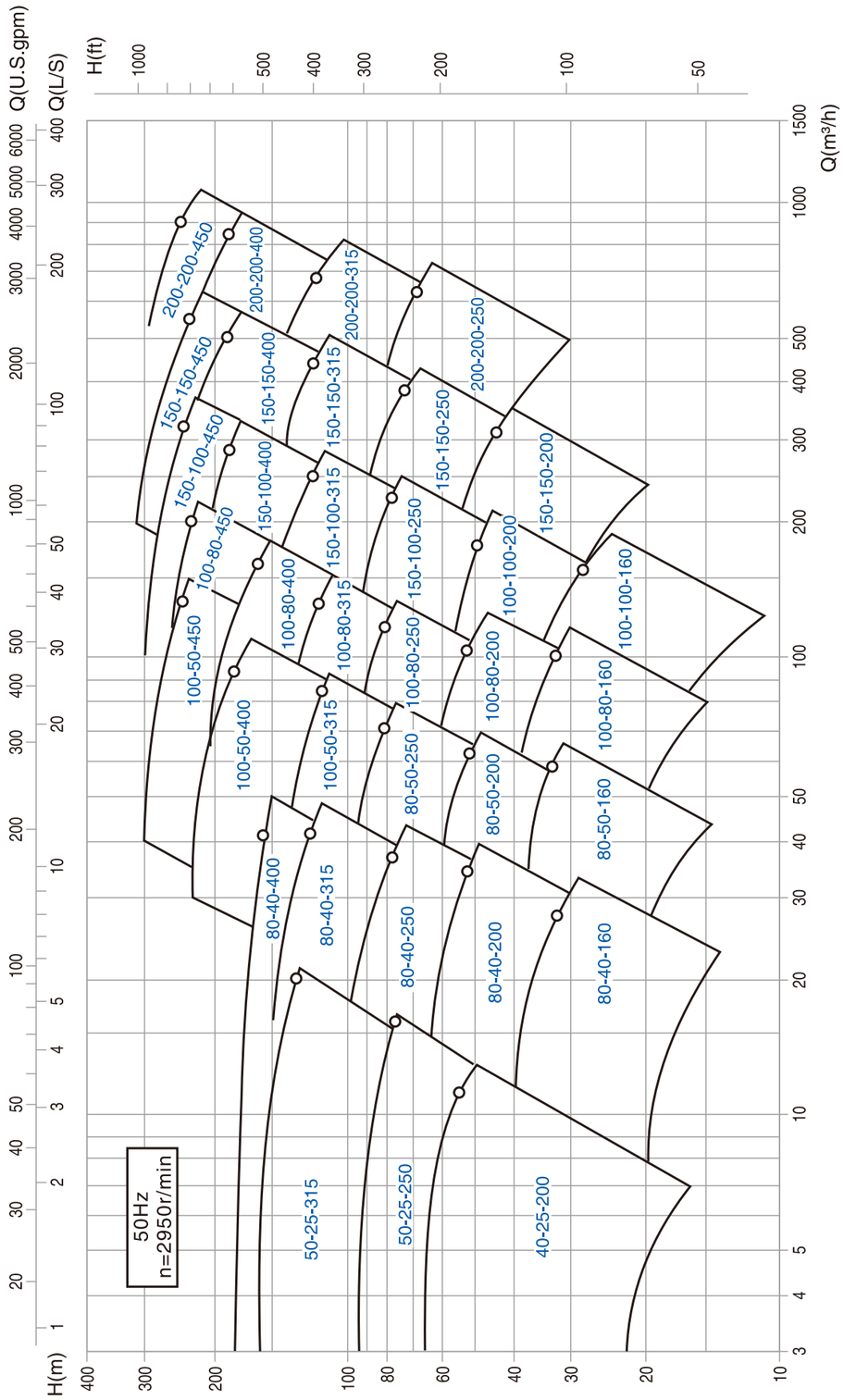

■ HPA型泵的性能范围（50Hz）Performance range of HPA (50Hz)

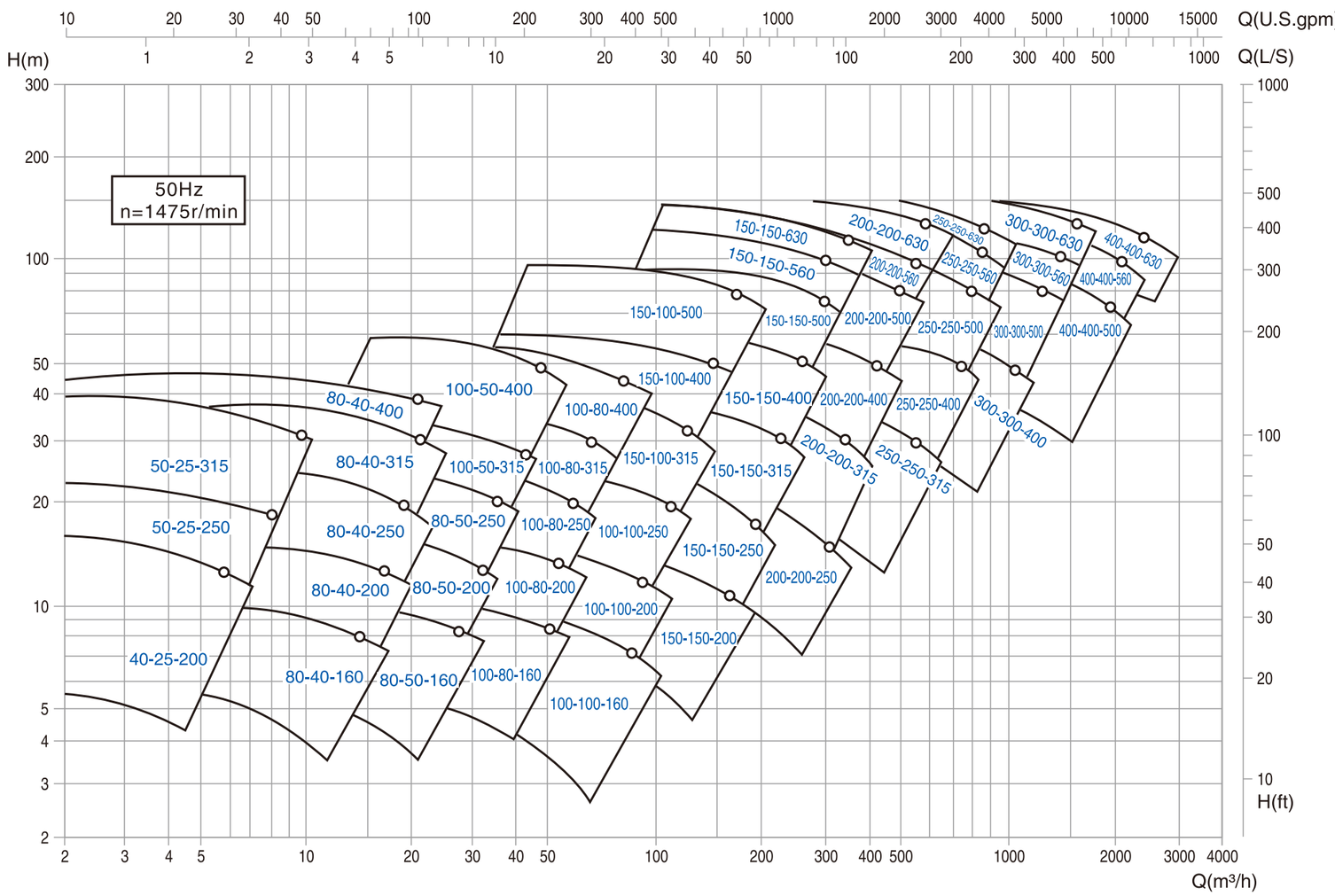

■ HPA型泵的性能范围（50Hz）Performance range of HPA (50Hz)

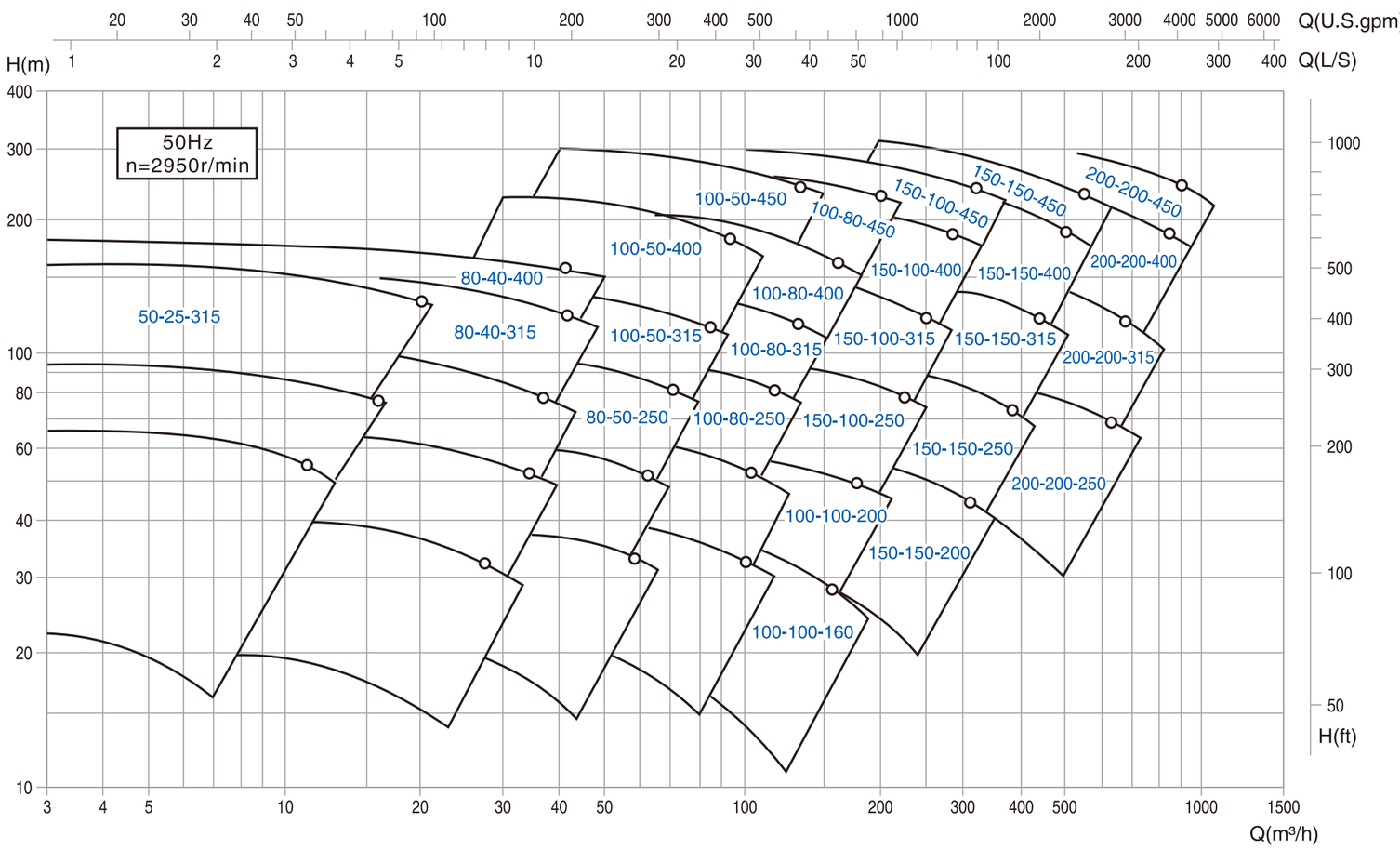

■ HPB型泵的性能范围（50Hz）Performance range of HPB (50Hz)

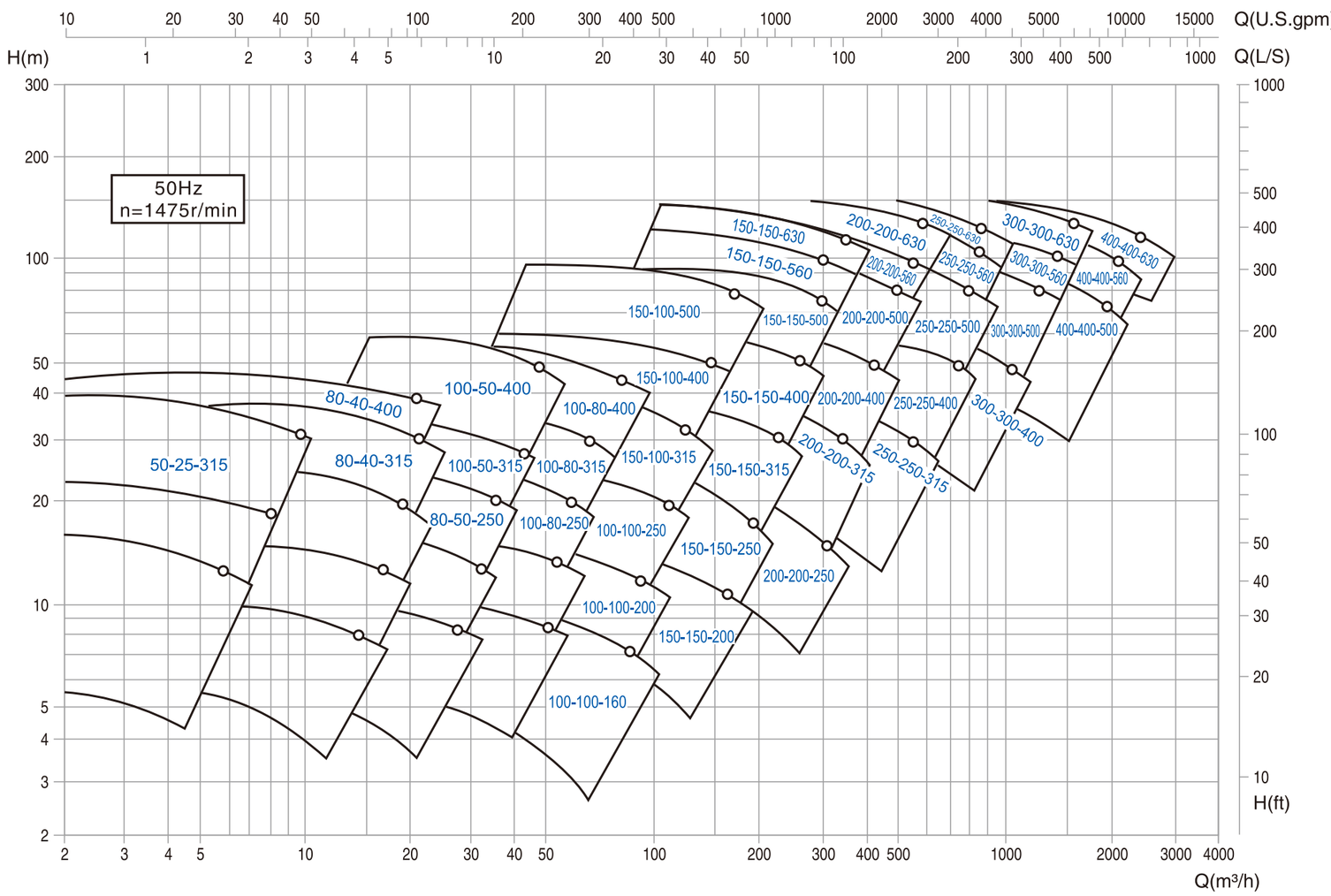

■ HPB型泵的性能范围（50Hz）Performance range of HPB (50Hz)

整泵安装尺寸图
Baseplate Dimensions

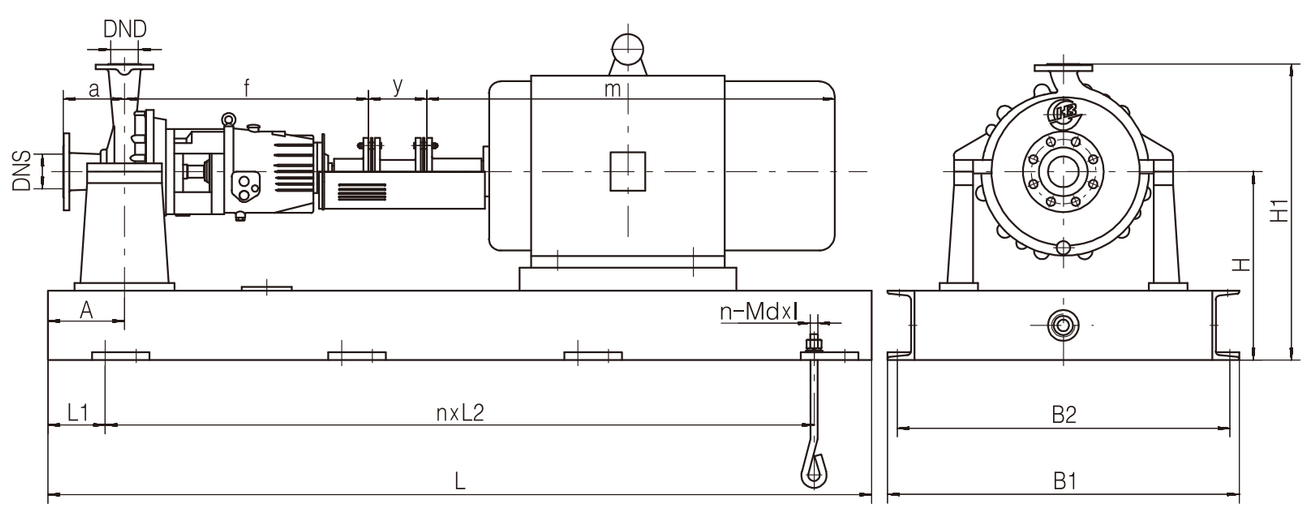

1）基于膜片联轴器，常规Y系列电动机；
2）具体安装详见公司施工图。

1) based on diaphragm couplings, conventional Y series motors;
2) specific installation details see company construction drawings.

型号 Pump Mode	机座号 Model	底座号 Chassis	泵安装尺寸 Pump outline and installation dimensions														
			DNS	DND	a	f	y	m	H	H1	A	L	L1	n×L2	B1	B2	N-Md×l
40-25-200	90S-90L	0.5	40	25	100	487	140	400	350	535	165	1230	150	2×465	760	710	6-M20×400
	100L-132S	1						520				1535	152.5	2×615	760	710	6-M20×400
50-25-250	100L-132M	1	50	25	140	603	140	560	420	655	220	1535	152.5	2×615	760	710	6-M20×400
	160M-160L	1.5						715	440	675		1840	150	2×770	760	710	6-M20×400
50-25-315	100L-132M	1	50	25	150	603	140	560	420	700	200	1535	152.5	2×615	760	710	6-M20×400
	160M-200L	1.5						840	440	720		1840	150	2×770	760	710	6-M20×400
	225S-250M	2					180	960				2145	150	3×615	760	710	8-M20×400
80-40-160	90S-90L	0.5	80	40	145	508	140	400	360	540	220	1230	150	2×465	760	710	6-M20×400
	100L-132M	1						560				1535	152.5	2×615	760	710	6-M20×400
80-40-200	100L-132M	1	80	40	140	508	140	560	360	560	220	1535	152.5	2×615	760	710	6-M20×400
	160M-160L	1.5						715	380	580		1840	150	2×770	760	710	6-M20×400
80-40-250	100L-132M	1	80	40	160	603	140	560	400	645	200	1535	152.5	2×615	760	710	6-M20×400
	160M-200L	1.5						840	420	665		1840	150	2×770	760	710	6-M20×400
80-40-315	100L-132M	1	80	40	153	603	140	560	420	680	200	1535	152.5	2×615	760	710	6-M20×400
	160M-200L	1.5						840	440	700		1840	150	2×770	760	710	6-M20×400
	225S-280S	2					180	1010				2145	150	3×615	760	710	8-M20×400
80-50-160	100L-132M	1	80	50	140	603	140	560	360	545	200	1535	152.5	2×615	760	710	6-M20×400
	160M-160L	1.5						715	380	565		1840	150	2×770	760	710	6-M20×400
80-50-200	100L-132M	1	80	50	150	603	140	560	360	560	220	1535	152.5	2×615	760	710	6-M20×400
	160M-200L	1.5						840	380	580		1840	150	2×770	760	710	6-M20×400
80-50-250	100L-132M	1	80	50	155	603	140	560	390	645	220	1535	152.5	2×615	760	710	6-M20×400
	160M-200L	1.5						840	410	665		1840	150	2×770	760	710	6-M20×400
	225S-250M	2					180	960				2145	150	3×615	760	710	8-M20×400
100-50-315	100L-132M	1	100	50	175	625	140	560	400	680	220	1535	152.5	2×615	760	710	6-M20×400
	160M-200L	1.5						840	420	700		1840	150	2×770	760	710	6-M20×400
	225S-280M	2					180	1075				2145	150	3×615	760	710	8-M20×400
	315S	4						1185	440	720		2450	152.5	3×715	915	865	8-M20×400

型号 Pump Mode	机座号 Model	底座号 Chassis	泵安装尺寸 Pump outline and installation dimensions														
			DNS	DND	a	f	y	m	H	H1	A	L	L1	n×L2	B1	B2	N-Md×l
100-50-400	160M-200L	3	100	50	180	625	140	840	505	855	240	1840	150	2×770	915	865	6-M20×400
	225S-280M	3.5					180	1075				2145	150	3×615	915	865	8-M20×400
	315S	4						1185				2450	152.5	3×715	915	865	8-M20×400
100-50-450	250M-315L	4	100	50	180	672	180	1500	525	905	240	2450	152.5	3×715	915	865	8-M20×400
100-80-160	100L-132M	1	100	80	155	603	140	560	360	580	200	1535	152.5	2×615	760	710	6-M20×400
	160M-200L	1.5						840	380	600		1840	150	2×770	760	710	6-M20×400
100-80-200	100L-132M	1	100	80	160	508	140	560	420	660	220	1535	152.5	2×615	760	710	6-M20×400
	160M-200L	1.5						840	440	680		1840	150	2×770	760	710	6-M20×400
100-80-250	100L-132M	1	100	80	165	603	140	560	420	700	250	1535	152.5	2×615	760	710	6-M20×400
	160M-200L	1.5						840	440	720		1840	150	2×770	760	710	6-M20×400
	225S-250M	2					180	960				2145	150	3×615	760	710	8-M20×400
100-80-315	160M-200L	1.5	100	80	190	625	140	840	470	770	220	1840	150	2×770	760	710	6-M20×400
	225S-250M	2					180	960				2145	150	3×615	760	710	8-M20×400
	280S-315M	4						1305	490	790		2450	152.5	3×715	915	865	8-M20×400
100-80-400	160M-200L	3	100	80	187	625	140	840	525	875	220	1840	150	2×770	915	865	6-M20×400
	225S-250M	3.5					180	960				2145	150	3×615	915	865	8-M20×400
	280S-315L	4						1500				2450	152.5	3×715	915	865	8-M20×400
100-80-450	315S-315L	4.5	100	80	200	672	180	1500	575	975	240	2760	150	4×615	915	865	10-M20×400
100-100-160	100L-132M	1	100	100	175	603	140	560	420	680	250	1535	152.5	2×615	760	710	6-M20×400
	160M-200L	1.5						840	440	700		1840	150	2×770	760	710	6-M20×400
100-100-200	100L-132M	1	100	100	170	603	140	560	390	660	250	1535	152.5	2×615	760	710	6-M20×400
	160M-200L	1.5						840	410	680		1840	150	2×770	760	710	6-M20×400
	225S-280M	2					180	1075				2145	150	3×615	760	710	8-M20×400
150-100-250	160M-200L	1.5	150	100	200	603	140	840	470	750	240	1840	150	2×770	760	710	6-M20×400
	225S-280M	2					180	1075				2145	150	3×615	760	710	8-M20×400
150-100-315	160M-200L	3	150	100	195	625	140	840	525	845	240	1840	150	2×770	915	865	6-M20×400
	225S-280M	3.5					180	1075				2145	150	3×615	915	865	8-M20×400
	315S-315L	4						1500				2450	152.5	3×715	915	865	8-M20×400

型号 Pump Mode	机座号 Model	底座号 Chassis	泵安装尺寸 Pump outline and installation dimensions														
			DNS	DND	a	f	y	m	H	H1	A	L	L1	n×L2	B1	B2	N-Md×l
150-100-400	160L-200L	5	150	100	210	672	140	840	545	925	240	1840	150	2×770	1065	1015	6-M20×400
	225S-280M	5.5					180	1075				2145	150	3×615	1065	1015	8-M20×400
	315S-315L	6						1500				2450	152.5	3×715	1065	1015	8-M20×400
150-100-450	225S-280M	5.5	150	100	220	672	180	1075	565	985	240	2145	150	3×615	1065	1015	8-M20×400
	315S-315L	6						1500				2450	152.5	3×715	1065	1015	8-M20×400
150-100-500	225S-280M	3.5	150	100	220	625	180	1075	565	1015	250	2145	150	3×615	915	865	8-M20×400
	315S-315L	4						1500				2450	152.5	3×715	915	865	8-M20×400
150-150-200	160M-200L	1.5	150	150	200	625	140	840	505	815	240	1840	150	2×770	760	710	6-M20×400
	225S-280M	2					180	1075				2145	150	3×615	760	710	8-M20×400
150-150-250	160M-200L	1.5	150	150	200	632	140	840	505	820	240	1840	150	2×770	760	710	6-M20×400
	225S-280M	3.5					180	1075	525	840		2145	150	3×615	915	865	8-M20×400
	315S-315L	4						1500				2450	152.5	3×715	915	865	8-M20×400
150-150-315	160L-200L	3	150	150	205	625	140	840	525	895	240	1840	150	2×770	915	865	6-M20×400
	225S-280M	3.5					180	1075				2145	150	3×615	915	865	8-M20×400
	315S-315L	6						1500				2450	152.5	3×715	1065	1015	8-M20×400
150-150-400	180L-200L	3.5	150	150	230	677	140	840	525	915	280	2145	150	3×615	915	865	8-M20×400
	250S-280M	6					180	1075				2450	152.5	3×715	1065	1015	8-M20×400
	315S-315L	6.5				780		1500	545	935		2760	150	4×615	1065	1015	10-M20×400
	355	8.5						1680	585	995		3165	152.5	4×715	1245	1195	10-M20×400
150-150-450	250M-280M	6	150	150	245	780	180	1075	565	1005	280	2450	152.5	3×715	1065	1015	8-M20×400
	315S-355M	6.5						1560	585	1025		2760	150	4×615	1065	1015	10-M20×400
150-150-500	250M-280M	6	150	150	240	625	180	1075	630	1110	280	2450	152.5	3×715	1065	1015	8-M20×400
	315S-355M	6.5						1560	650	1130		2760	150	4×615	1065	1015	10-M20×400
150-150-560	280S-280M	6	150	150	250	677	180	1075	650	1150	280	2450	152.5	3×715	1065	1015	8-M20×400
	315S-355M	6.5						1560	670	1170		2760	150	4×615	1065	1015	10-M20×400
150-150-630	280S-280M	6	150	150	260	672	180	1075	630	1170	300	2450	152.5	3×715	1065	1015	8-M20×400
	315S-355M	6.5						1560	650	1190		2760	150	4×615	1065	1015	10-M20×400
200-200-250	225S-280M	5.5	200	200	235	634	180	1075	525	915	280	2145	150	3×615	1065	1015	8-M20×400
	315S-315L	6						1500				2450	152.5	3×715	1065	1015	8-M20×400

型号 Pump Mode	机座号 Model	底座号 Chassis	泵安装尺寸 Pump outline and installation dimensions														
			DNS	DND	a	f	y	m	H	H1	A	L	L1	n×L2	B1	B2	N-Md×l
200-200-315	225S-280M	5.5	200	200	245	696		1075	545	965	280	2145	150	3×615	1065	1015	8-M20×400
	315S-315L	6						1500				2450	152.5	3×715	1065	1015	8-M20×400
200-200-400	250M-280M	6	200	200	260	780	180	1075	550	1020	380	2450	152.5	3×715	1065	1015	8-M20×400
	315S-315L	6.5						1500	570	1040		2760	150	4×615	1065	1015	10-M20×400
	355-500	12.5						2500	730	1200		3880	152.5	5×715	1245	1195	12-M20×400
200-200-450	355-500	13	200	200	265	875	180	2500	730	1240	320	3880	152.5	5×715	1395	1345	12-M20×400
200-200-500	315L	8	200	200	265	699	180	1500	630	1170	320	2760	150	4×615	1245	1195	10-M20×400
	355-500	13						2500	730	1270		3880	152.5	5×715	1395	1345	12-M20×400
200-200-560	315L	8	200	200	270	780	180	1500	580	1150	380	2760	150	4×615	1245	1195	10-M20×400
	355-500	13						2500	730	1300		3880	152.5	5×715	1395	1345	12-M20×400
200-200-630	355L	10.5	200	200	280	780	180	1680	680	1300	380	3165	152.5	4×715	1395	1345	10-M20×400
	355-500	13						2500	730	1350		3880	152.5	5×715	1395	1345	12-M20×400
250-250-315	250M-280M	6	250	250	260	660	180	1075	580	1050	380	2450	152.5	3×715	1065	1015	8-M20×400
	315S-315L	6.5						1500	600	1070		2760	150	4×615	1065	1015	10-M20×400
250-250-400	250M-280M	6	250	250	255	707	180	1075	580	1050	380	2450	152.5	3×715	1065	1015	8-M20×400
	315S-315L	6.5						1500	600	1070		2760	150	4×615	1065	1015	10-M20×400
250-250-500	315S-315L	8	250	250	300	780	180	1500	650	1260	380	2760	150	4×615	1245	1195	10-M20×400
	355-500	13						2500	730	1340		3880	152.5	5×715	1395	1345	12-M20×400
250-250-560	355L	10.5	250	250	300	875	180	1680	620	1240	380	3165	152.5	4×715	1395	1345	10-M20×400
	355-500	14						2500	730	1350		3880	152.5	5×715	1550	1500	12-M20×400
250-250-630	355-500	14	250	250	320	875	180	2500	730	1390	380	3880	152.5	5×715	1550	1500	12-M20×400
300-300-400	315S-315L	8	300	300	290	717	180	1500	680	1270	400	2760	150	4×615	1245	1195	10-M20×400
300-300-500	355-500	13	300	300	320	780	180	2500	730	1360	400	3880	152.5	5×715	1395	1345	12-M20×400
300-300-560	355-500	13	300	300	330	875	180	2500	730	1400	380	3880	152.5	5×715	1395	1345	12-M20×400
300-300-630	355-500	14	300	300	360	875	180	2500	730	1450	400	3880	152.5	5×715	1550	1500	12-M20×400
400-400-500	355-560	13	400	400	370	875	180	2500	790	1560	400	3880	152.5	5×715	1395	1345	12-M20×400
400-400-560	355-560	13	400	400	382	875	180	2500	790	1610	400	3880	152.5	5×715	1395	1345	12-M20×400
400-400-630	355-560	14	400	400	382	875	180	2500	790	1650	400	3880	152.5	5×715	1550	1500	12-M20×400